FLOOR machine line

The RWS models are the floor machine line, which are in two versions available. This machines also have the RUFF modular system with 12 interchangeable winding heads and 9 roller tables for the largest flexibility. The sturdy contsruction with highest precision in prodution and best quality of material guaranties reliability and very long lifetime of the machines.

FLOOR machine line RWS

Models RWS-GLOBAL, RWS-EVOLUTION, RWS-GLOBAL-SHUTTLE, RWS-EVO-SHUTTLE, RWS-TAPE

12 interchangeable heads

7 gear rack heads	**RW 33** **RW 45-380**	**RW 44-1** **RW 45-EH**	**RW 44-1V**	**RW 45**	**RW 45-V**
5 taping heads	**RW 33/B**	**RW 44/1B**	**RW 45/B**	**RW 45-380/B-U**	**RW 45/BU**

9 interchangeable tables	**RW 333** **RW 333-V-13**	**RW 333-V** **RW 444**	**RW 333-V-SO** **RW 444-P**	**RW 333-VS1** **RW 444-PSR**	**RW 333-VS2**

Capability ranges

wire Ø monofilar	0.4 - 4.5 mm	**tape size**	9 - 25 mm
wire Ø bifilar	bis 2 x 2.8 mm	**supply voltages**	3 Ph / 400 V / 16 A
finished core OD	65 - 2800 mm	**machine size**	approx. 1100 x 700 mm
finished core ID	up from 25 mm		Shuttle: 2000 x 700 mm
finished core H	up to 380 mm	**machine weight**	approx. 200 kg
compressed air	6 bar		

Model RWS-Global

The RWS-Global is for standard winding applications. The new NC controller with touch screen is user friendly and it is very easy to understand. Just a few inputs are needed for create a winding program. All standard winding methods are available e.g.: Tape-/ Wire winding, Index, Reverse winding. Several winding sequences can be written in one winding program. So for example different pitch and index etc. More than 200 programs can be saved on this control. All languages in Latin characters are available on this controller.

controller	5.7" monochrom touchpanel with 2 function buttons (start/stop)
language	all Latin characters
winding head	motor with inverter
roller table	stepper motor

Model RWS-Evolution

The RWS-Evolution is the high end floor toroidal winding machine base from RUFF. The new controller with innovative programming is user friendly and through the high resolution touch screen display it is simple to understand. Programs are saved in CSV-Format. Therefore, programs can be made externely by Excel. The Windows system allows own data management saved onto USB-Stick, or onto the CF-Card in a seperate file on the machine. A central program management at an external PC (Server) is possible via Ethernet connection. Easy file structure can be created and every program can be reported with a text description. The machine can also be remote controlled by Ftp- connection. Teleservice by our technicians via internet connection (Ftp-connection) for trouble shooting in the logic program. Update of PLC- and visual display software via USB-Stick, datas can be sent via E-mail.

operating panel	8” touchpanel with 4 function buttons
memory	Compact Flash 64MB - 2GB
system	Windows CE 5.0
language	Unitext (all characters)
interface	USB-connention, ethernet-interface, 1x10/100 Mbit, RJ45, PS/2–interface, serial interface
PCI modul card	MC-CAN Dual Can Controller, hand control unit with 3 additional function buttons

Models RWS-Global-Shuttle / RWS-Evo-Shuttle

The machine bases in Shuttle-Version have a slide system for the winding heads. It enables to move the winding heads out of the winding area for a comfortable load and unload the machine with toroidal cores (e.g. with a crane). This system brings especially for very large or very heavy cores crucial advantages.

RWS-Global-Shuttle

controller	5.7” monochrom touchpanel with 2 function buttons (start/stop)
language	all latin characters
winding head	motor with inverter
roller table	stepper motor

or

RWS-Global-Shuttle

operating panel	8” touchpanel with 4 function buttons
memory	Compact Flash 64MB - 2GB
system	Windows CE 5.0
language	Unitext (all characters)
interface	USB-connention, ethernet-interface, 1x10/100 Mbit, RJ45, PS/2–interface, serial interface
PCI modul card	MC-CAN Dual Can Controller, hand control unit with 3 additional function buttons

Stand alone taping station to be combined with toroidal winding machines for double head applications - Model RWS-Tape

RUFF has designed a low cost standardised taping station in order to replace the oneway special and expensive double head machine. It is a flexible taping system that can be placed next to existing toroidal winding machines and therefore enables simultaneous winding and taping of transformers in the most economical method. The head is mounted on a ground plate which sits on sliding rails and enables to slide the head easily into the core. It incorporates the RUFF modular system and can be equipped with interchangeable heads. One or more working stations can be combined with a winding machine.

controller	integral with 1 electronic counter
taping speed	up to 140 rpm
core drive	not required as the core drive is given from toroidal winding machines which is placed next to
winding head drive	electronic controlled 3-phase motor 1,5 kW
supply voltages	230, 110, 240 V / 50 Hz / AC / 16 A
machine size	1100 x 700 mm
machine weight	170 kg net, 270 kg gross

Simultaneous taping and winding operation

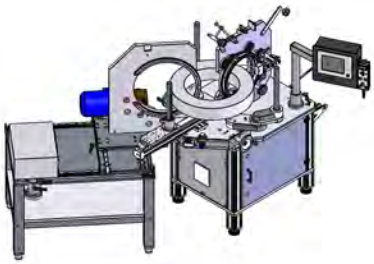

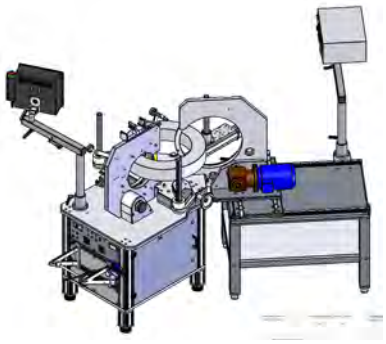

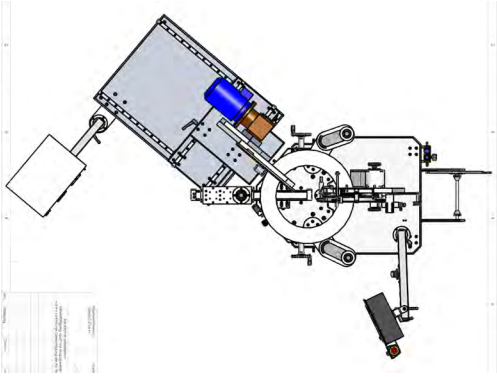

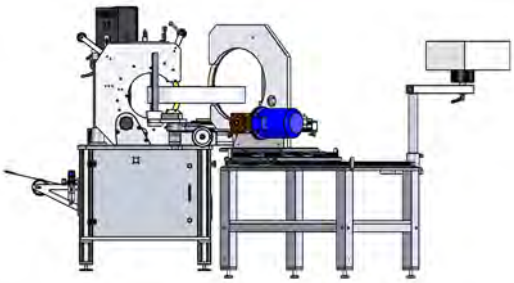

Gear rack winding heads for the FLOOR models

The gear rack winding heads are designed for precision layer winding with low build up factors. Typical applications are the production of variacs, potentiometers and heavy transformer windings. All the winding heads work with a robust gear rack and drive train gear system, this allows the winding head to generate a large amount of torque which makes it suitable for large wire size. The wire is de-reeled from the winding magazine via two guide rollers as it is layered on the core, the magazine itself is held back under constant tension via the braking system which is adjustable to suit each wire size. All gear rack winding heads can utilise two designs of magazines: the „KN“ type has a quick opening facility and the „SN“ type which has a completely removeable section for taller cores. A range of narrow racks and multifilar wire guides can be supplied for reduced core I.D.'s and strip winding. Customised components for special applications can be supplied upon request.

winding head data	RW 33		RW 44-1		RW 44-1V		RW 45		RW 45-V		RW 45-380		RW 45-EH	
	mm	inch/AWG	mm	inch/AWG	mm	inch/AWG	mm	inch/AWG	mm	inch/AWG	mm	inch/AWG	mm	inch/AWG
wire range	0,4-2,5	10-26	0,4-3,0	8½-26	0,4-3,55	7-26	0,5-2,65	9½-24	0,4-3,55	7-26	0,5-2,65	9½-24	0,4-4,5	5½-24
magazine diameter	220	8,66	340	13,39	340	13,39	490	19,29	490	19,29	490	19,29	490	19,29
finished core OD	65-350	2,55-14	90-500	3,54-20	100-500	4-20	90-2800	3,54-110	100-2800	4-110	90-2800	3,54-110	100-2800	4-110
finished core ID	25	10-26	35	1,38	50	1,97	40	1,57	50	1,97	40	1,57	100	1,97
finished core height	100	3,94	170	6,7	170	6,7	250	9,84	250	9,84	380	14,96	250	9,84
max. winding speed rpm	140		140		100		100		80		100		80	
compatible roller tables	RW 333		RW 333 RW 333-V		RW 333 RW 333-V		RW 333-V RW 333-VS0 RW 444 RW 444-P RW 444-PSR		RW 333-VS0 RW 333-VS1 RW 333-VS2 RW 444 RW 444-P RW 444-PSR		RW 333-V RW 333-VS0 RW 333-VS1 RW 333-VS2 RW 444 RW 444-P RW 444-PSR		RW 333-VS0 RW 333-VS1 RW 333-VS2 RW 444 RW 444-P RW 444-PSR	
compatible m/c bases	all RWS machine series		all RWS machine series		all RWS machine series		all RWS machine series		all RWS machine series		all RWS machine series		all RWS machine series	

Magazine data base with wire length in meters: for wire length in feet, multiply by factor 3,28

Magazine type	final hole diameter		final hole by biggest height		0,4	0,5	0,6	0,7	0,8	0,9	1,0	1,12	1,25	1,32	1,4	1,5	1,6	1,7	1,8	1,9	2,0	2,12	2,24	2,36	2,5	2,65	2,8	3,0	3,15	3,35	3,55	3,66	4,0	4,5	mm
					26	24	22½	21	20	19	18	17	16½	16	15½	15	14½	14	13½	13	12½	12	11½	11	10½	10	9½	9	8½	8	7½	7	6½	5½	AWG
	mm	inch	mm	inch																															
33/20	25	0,98	35	1,38	106	69	48	35	28	22	18	14																							
25	28	1,10	38	1,50	181	118	83	60	47	38	31	25																							
30	31	1,22	40	1,58	200	130	90	66	52	42	35	30	27	20	18,5	15	14																		
35	33	1,30	43	1,69	294	191	134	100	77	61	50	40	35	30	26	23	20	18,5	16	14,5	13	11	10	9	8										
37	37	1,46	52	2,05	414	273	193	140	111	91	75	62	56	44	39	33	29	26	23	20	18	16	14	12	11										
45	40	1,57	53	2,09	439	286	200	146	115	92	76	63	57	45	39,5	34	30	27	24	21	19	17	15	13	12										
50	46	1,81	55	2,17	622	405	284	206	164	130	106	85	76	62	55	48	42	38	34	30	27	25	22	20	18										
60	48	1,89	57	2,24	703	457	321	233	185	147	120	96	86	70	62	54	48	43	38	34	31	28	25	23	21										
70	55	2,17	65	2,56	844	549	385	280	222	176	144	116	104	84	75	65	58	51	46	41	37	34	30	27	24										
80	65	2,56	75	2,95	1152	749	526	382	303	240	197	158	143	115	102	86	80	70	63	56	51	45	41	35	32										
90	77	3,03	80	3,15	1582	1029	723	525	417	330	271	216	194	157	141	123	109	97	86	78	70	63	56	51	45										
100	100	3,237	100	3,937	2330	1500	1060	774	615	480	400	320	260	233	203	182	160	143	128	115	100	90													
44/35	35	1,38	60	1,378	293	190	133	97	77	61	50	40	36	29	26	22	20																		
40	40	1,58	60	1,9	435	283	200	144	115	90	74	60	51	43	38	34	30	26	23	21	19	17	15	14	12	11	9,5	8,5							
45	45	1,77	60	2,165	661	430	302	220	175	138	113	90	77	67	59	51	45	40	36	32	29	25	22	20	17	16	14	13	11	10					
50	50	1,97	62	2,44	850	554	389	282	224	178	145	118	100	86	76	66	58	52	46	42	37	33	30	27	24	21	19	17	15	13,8	12				
60	60	2,36	68	2,68	1050	685	481	350	277	220	180	145	117	105	94	82	73	64	57	52	47	42	37	34	30	27	24	21	19	17	15	10			
65	65	2,56	73	2,87	1316	856	600	437	347	274	225	180	146	131	117	102	90	80	72	65	58	52	47	42	38	34	30	26	24	21	19	13			
70	70	2,76	78	3,07	1490	969	680	494	394	312	255	205	166	150	133	116	103	91	79	73	66	60	53	48	43	38	34	30	27	24	22	17			
80	80	3,15	90	3,54	2128	1350	972	706	560	446	365	293	230	213	190	166	147	130	117	105	95	85	76	69	62	55	49	43	39	34	31	20			
90	90	3,54	98	3,86	2533	1647	1158	843	668	530	434	348	282	253	226	198	174	155	139	125	112	101	90	81	73	65	58	51	46	41	36	28			
100	120	4,72	130	5,12	3360	2180	1530	1100	886	700	575	466	393	340	300	260	230	206	184	166	150	133	120	108	97	86	77	67	61	54	48	31			
120	140	5,52	150	5,91	4670	3037	2134	1550	1231	976	800	642	520	467	416	364	322	286	256	230	208	186	166	150	135	120	107	93	85	75	67	43			
150	170	6,70	180	7,09	8184	5323	3740	2717	2158	1710	1401	1125	911	818	730	639	564	501	449	404	364	326	292	263	236	211	188	164	150	132	118				
180	200	7,88	210	8,27	9936	6462	4541	3299	2619	2076	1701	1366	1106	993	886	776	685	509	545	480	442	395	355	320	287	256	229	199	182	161	143				
45/40	40	1,58	52	2,04	630	410	290	208	166	130	107	87	74	60	55	49	43	37	33	30	27														
45	45	1,77	57	2,24	958	623	437	319	253	200	163	130	111	97	85	74	65	58	52	46	42	37	33	30	27										
50	50	1,97	65	2,55	1232	803	564	408	324	258	210	171	145	124	110	95	84	75	66	60	53	47	43	39	34	31	28	24	22	19	17	15	14	12	
60	60	2,36	73	2,87	1522	993	697	507	401	319	261	210	169	152	136	118	105	93	82	75	68	60	54	49	43	39	35	30	27	24	21	19	17	15	
65	65	2,56	78	3,07	1900	1241	870	633	503	397	326	261	211	189	169	147	130	116	104	94	84	75	68	60	55	48	43	38	34	30	27	24	21	19	
70	70	2,76	83	3,26	2160	1405	986	716	571	452	369	297	240	217	192	168	149	132	114	105	95	87	76	69	62	55	49	43	39	34	31	28	24	22	
80	80	3,15	95	3,74	3085	1957	1409	1023	812	646	529	424	333	308	275	240	213	188	169	152	138	123	110	100	89	79	70	61	56	49	44	40	35	31	
90	90	3,54	103	4,05	3672	2388	1679	1222	968	768	629	504	408	366	327	287	252	224	201	181	162	146	130	117	105	94	84	73	67	59	52	47	42	37	
100	120	4,72	135	5,31	4872	3161	2218	1595	1284	1015	833	675	569	493	435	377	333	298	266	240	217	192	174	156	140	124	111	96	88	78	69	63	55	50	
120	140	5,52	155	6,10	6580	4279	3007	2184	1735	1375	1127	904	732	658	587	514	453	403	361	325	293	262	235	212	190	173	155	135	127	109	97	88	77	70	
150	170	6,70	185	7,28	12206	7938	5578	4052	3218	2550	2090	1678	1358	1220	1089	953	841	748	669	603	543	486	436	393	352	313	280	244	223	196	175	159	140	126	
180	200	7,88	215	8,46	14390	9359	6576	4778	3794	3007	2464	1978	1602	1439	1284	1124	992	882	789	711	640	573	514	463	415	370	330	288	263	232	207	187	165	148	

Gear rack taping heads for the FLOOR models

These taping heads work with a gear rack system similar to the gear rack winding heads but vary in one major way. That is as the tape is loaded on the tape magazine it is also taped on to the core. A flat leather belt round the outside of the tape magazine controls the taping tension and is infinitely variable. The tape is automatically cut when the correct length of tape is loaded as is the complete operation. Customised components for special applications can be supplied upon request.

taping head data	RW 33/B		RW 44/1B		RW 45/B		RW 45-B-380		RW 45/B-U RW 45-380/B-U	
	mm	inch/AWG	mm	inch/AWG	mm	inch/AWG	mm	inch/AWG	mm	inch / AWG
tape widths	9-20	0,354-0,787	9-25	0,354-0,984	9-25	0,354-0,984	2-25	0,354-0,984	9-25	0,354-0,984
build up factor	+20	+0,787	+25	+0,984	+25	+0,984	+25	+0,984	Ø Bandrolle (max 200 mm)	
magazine diameter	220	8,66	340	13,39	490	19,29	490	12,29		
finished core OD	65-350	2,55-14	90-500	3,54-20	90-2800	3,54-110	90-2800	3,54-110	90-2800	3,54-110
finished core ID	29	1,44	34	1,34	34	1,34	34	1,34	Ø Bandrolle (max 200 mm)	
finished core height	100	3,94	170	6,69	250	9,842	380	14,96	250/380	9,842/14,96
max. taping speed rpm	140		140		120		120		120	
compatible roller tables	RW 333, RW 333-V		RW 333 RW 333-V RW 333-V-SO		RW 333-V RW 333-V-SO RW 333-VS1 RW 333-VS2 RW 444 RW 444-P RW 444-PSR		RW 333-V RW 333-V-SO RW 333-VS1 RW 333-VS2 RW 444 RW 444-P RW 444-PSR		RW 333-V RW 333-VSO RW 333-VS1 RW 333-VS2 RW 444 RW 444-P RW 444-PSR	
compatible m/c bases	all RWS machine series		all RWS machine series		all RWS machine series		all RWS machine series		all RWS machine series	

Combination possibilities between roller tables and winding heads

finished core OD range		RW 33	RW 33/B	RW 44-1	RW 44/1B	RW 44-1V	RW 45	RW 45-V	RW 45-380	RW 45-EH
RW 333 with rubber rollers Ø 75	inch	3,15-14,0	3,15-14,0	4,35-14,0	4,35-14,0	4,92-14,0				
	mm	80-350	80-350	110-350	110-350	125-350				
RW 333 with rubber rollers Ø 90	inch	2,55-14,0	2,55-14,0	4,0-13,0	4,0-13,0	4,53-13,0				
	mm	65-350	65-350	100-330	100-330	100-330				
RW 333 with rubber rollers Ø 120	inch			3,54-11,8	3,54-11,8	4,0-11,8				
	mm			90-300	90-300	100-300				
RW 333-V with rubber rollers Ø 75	inch	4,0-14,0	4,0-14,0	5,12-14,0	5,12-14,0		5,12-14,0	5,12-14,0	5,12-14,0	5,12-14,0
	mm	100-350	100-350	130-350	130-350		130-350	130-350	130-350	130-350
RW 333-V with rubber rollers Ø 90	inch	3,35-13,0	3,35-13,0	4,72-13,0	4,72-13,0	5,51-14,0	4,72-13,0	4,72-13,0	4,72-13,0	4,72-13,0
	mm	85-330	85-330	120-330	120-330	140-330	120-330	120-330	120-330	120-330
RW 333-V with rubber rollers Ø 120	inch					4,92-14,0	3,54-14,0	4,0-14,0		
	mm					125-350	90-350	100-350		
RW 333-V-S1 (with swivel arms)	inch			4,33-19,7	4,33-19,7	4,33-19,7	4,33-19,7	4,33-19,7	4,33-19,7	
	mm			110-500	110-500	110-500	110-500	110-500	110-500	
RW 333-V-S2 (with swivel arms)	inch						9,84-39,37	9,84-39,37	9,84-39,37	9,84-39,37
	mm						250-1000	250-1000	250-1000	250-1000
RW 333-VS-13 (with extra horizontal rollers for heavy cores)	inch			4,0-19,7	4,0-19,7	4,0-19,7	4,0-19,7	4,0-19,7	4,0-19,7	4,0-19,7
	mm			100-500	100-500	100-500	100-500	100-500	100-500	100-500
RW 444 (with swivel arms)	inch						3,94-32	3,94-32	4,0-19,7	4,72-32
	mm						100-800	100-800	100-800	120-800
RW 444-P (with swivel arms)	inch						3,94-39,3	3,94-39,3	3,94-39,3	4,72-39,3
	mm						100-1000	100-1000	100-1000	120-1000

finished core ID range		RW 33	RW 33/B	RW 44-1	RW 44/1B	RW 44-1V	RW 45	RW 45-V	RW 45-380	RW 45-EH
RW 444-PSR (with swivel arms)	inch						16,7	16,7	16,7	16,7
	mm						500	500	500	500

Standard core transport rollers for roller tables for FLOOR machines

roller table type	A Ø mm	B Ø mm	C Ø mm	D Ø mm
RW 333	75	40	22	100
RW 333	90	40	22	100
RW 333	120	50	22	160
RW 333	140	50	22	160
RW 333-V	120	50	30	160
RW 333-V	140	50	30	160
RW 333-V	120	50	30	200
RW 333-V	140	50	30	200
RW 444	120	50	35	160
RW 444	140	50	35	160
RW 444	120	50	35	200
RW 444	140	50	35	200
RW 444-P	120	50	35	160
RW 444-P	140	50	35	160
RW 444-P	120	50	35	200
RW 444-P	140	50	35	200
RW 444-PSR	120	50	35	160
RW 444-PSR	140	50	35	160
RW 444-PSR	120	50	35	200
RW 444-PSR	140	50	35	200

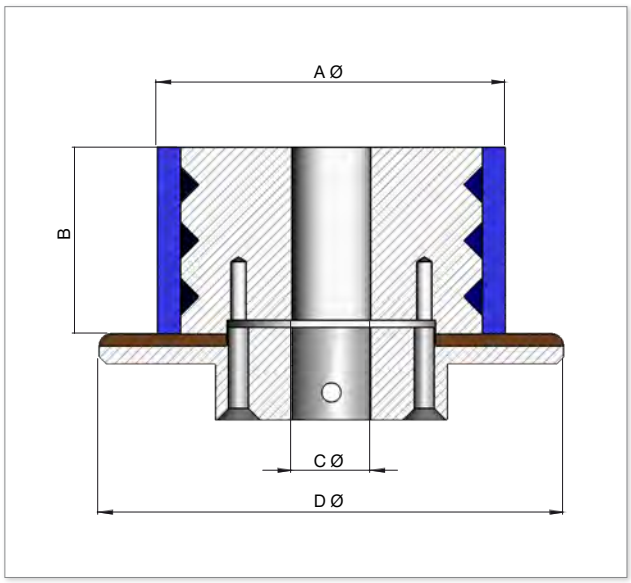

Tapered core transport rollers for roller tables for FLOOR machines

roller table type	A Ø mm	B Ø mm	C Ø mm	D Ø mm
RW333	55	25	30	105
RW333	112	27	30	167
RW 333-V	55	25	30	105
RW 333-V	112	27	30	167
RW444	55	25	30	105
RW444	112	27	30	167
RW444-P	55	25	30	105
RW444-P	112	27	30	167
RW444-PSR	55	25	30	105
RW444-PSR	112	27	30	167

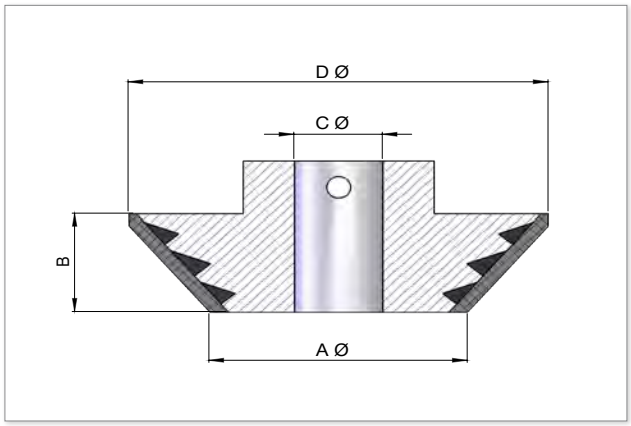

kleine Spulen mit Feindraht **small coils with fine wire**						
bare core size mm	6,7 x 6,7 x 4,8	7 x 3,2 x 3	6,2 x 4,4 x 5,3	6,6 x 3 x 2,9	8 x 3,75 x 3,7	10,5 x 4 x 4,8
turns x Ø wire size mm	37 x 0,20	150 x 0,08 bifilar	150 x 0,08 trifilar	1 layer x 0,112 bifilar	30 x 0,35	200 x 0,125 bifilar
wound coil size mm	7,3 x 1,9 x 5,3	7,4 x 2,3 x 3,6	7,4 x 2,3 x 3,6	7,2 x 2,5 x 3,5	9,1 x 2,7 x 4,5	11,2 x 3,1 x 5,5
machine base	**MINI**	**MINI**	**MINI**	**MINI**	**MINI**	**MINI**
roller table	**RW 111-MINI (F.B.)**	**RW 111-MINI (R.B.)**	**RW 111-MINI (R.B.)**	**RW 111-MINI (R.B.)**	**RW 111-MINI (F.B.)**	**RW 111-MINI (R.B.)**
winding head + magazine	**RW 60-MINI + 1,6**	**RW 60-MINI + 1,6**	**RW 45-MINI + 1,8**	**RW 75-MINI + 1,8**	**RW 75-MINI + 2,0**	**RW 75-MINI + 2,0**
kleine Spulen mit Feindraht **small coils with fine wire**						
bare core size mm	9,5 x 4,8 x 3, 2	13,5 x 7,8 x 2, 8	16 x 4 x 8	16 x 8,5 x 6	12 x 6 x 4, 5	15,5 x 9 x 5, 5
turns x Ø wire size mm	61 x 0,18 x 37 x 0,3	580 x 0,1	1 layer x 0,1	800 x 0,3	30 x 0,4	17 x 0,5 bifilar
wound coil size mm	1 0,8 x 2,9 x 4, 6	14,5 x 5,5 x 4	16,5 x 2,9 x 9	18 x 5 x 8,9	13 x 4,3 x 5,5	16 x 7 x 7
machine base	**MINI**	**MINI**	**RWE**	**RWE**	**RWE**	**RWE**
roller table	**RW 111-MINI (F.B.)**	**RW 111-MINI (S.S.)**	**RW 111 (I.S.)**	**RW 111 (F.B.)**	**RW 111 (F.B.)**	**RW 111-V**
winding head + magazine	**RW 100-MINI + 2,0**	**RW 100-MINI + 4,5**	**RW 10 + 2,0**	**RW 100-C + 2,5**	**RW 100-C + 2,0**	**RW 100 + 3,0**
kleine Drossel und Filter mit dickem Draht **small chokes and filters with heavy wire**						
bare core size mm	13 x 7,7 x 8,5	24 x 13 x 7	20,5 x 12,5 x 6,5	38,5 x 19,8 x 8,2	40 x 24 x 15	33 x 17,5 x 11,5
turns x Ø wire size mm	23 x 0,8	20 x 1,6	35 x 1,15	2 layer x 0,8	11 x 1,32 trifilar	100 x 1,0
wound coil size mm	16,8 x 4,2 x 10,5	28,5 x 8,5 x 11, 5	24 x 6 x 11,5	40,5 x 17 x 11	44 x 20 x 18	39 x 9 x 18
machine base	**RWE**	**RWE**	**RWE**	**RWE**	**RWE**	**RWE**
roller table	**RW 111-V**	**RW 112**	**RW 112**	**RW 222-L**	**RW 222-L**	**RW 112**
winding head + magazine	**RW 100 + 3,0**	**RW 200-V + 4,7**	**RW 200-V + 4,2**	**RW 1 + 1/11**	**RW 2 + 2/13**	**RW 200-V + 6,3**
kleine Drossel und Filter mit dickem Draht **small chokes and filters with heavy wire**						
bare core size mm	47 x 24 x 18,4	38,2 x 25 x 16,4	4 x 2,0 x 1,6	47 x 24 x 18,4	53 x 28 x 18	51 x 30 x 23,5
turns x Ø wire size mm	130 x 1,2 bank wound	3 sectors each 11 x 1,8	36 x 0,1 bifilar	95 x 1 , 8	each sec.with 3 layers with bank wound x1,8	32 x 2,5
wound coil size mm	55 x 9 x 28	47 x 17 x21		58 x 10 x 29	60 x 16 x 27	58 x 24 x 30,5
machine base	**RWE**	**RWE**	**MINI**	**RWE**	**RWE**	**RWE**
roller table	**RW 222-VSO**	**RW 112**	**RW 35-D-RO**	**RW 222-VSO**	**RW 222-VSO**	**RW 332-SO**
winding head + magazine	**RW 300-V + 8,2**	**RW 200-VS + 7,4**	**RW 111-D**	**RW 300-V + 8.2**	**RW 300-V + 9**	**RW 3-V + 3/25**
stromkompensierte Drossel **balancing chokes**						
bare core size mm	15,5 x 8 x 6	13,5 x 6 x 5,5	19 x 9 x 10	25 x 14 x 8	26 x 14 x 10	34,5 x 15 x 15
turns x Ø wire size mm	each sector 20 x 0,3	each sector 12 x 0,5	each sector 20 x 0,4	each sector 20 x 0,8	each sector 9 x 1,4	each sector 68 x 0,9
wound coil size mm	16,1 x 7,2 x 6,5	15 x 5 x 7	20 x 8 x 12	28 x 10 x 11	30 x 10,5 x 14	39 x 8,5 x 21
machine base	**RWE**	**RWE**	**RWE**	**RWE**	**RWE**	**RWE**
roller table	**RW 111-V (F.B.)**	**RW 111-V (F.B.)**	**RW 111-V**	**RW 112**	**RW 112**	**RW 112**
winding head + magazine	**RW 100-C + 2,5**	**RW 100-C + 2,5**	**RW 100-C + 4,0**	**RW 200-V + 4,7**	**RW 200-V + 5,1**	**RW 200 + 5,0**
kleine Sonderspulen **small coils special**						
bare core size mm	13 x 7,5 x 5	22,6 x 6,5 x 12	16,5 x 7 x 21,5	17 x 7 x 18,5	18 x 16 x 2,8	22 x 15,8 x 4
turns x Ø wire size mm	7 x 0,355 litz wire	55 x 0,16	1 sector x 0,25	each sector 19 x 0,3	1 layer x 0,25 precision wound	each sec. 1 layer prec. wound x 0,125
wound coil size mm	15,3 x 6 x 6,6			18 x 6 x 19,5	18,8 x 14,6 x 3,5	22,5 x 14,9 x 4,4
machine base	**RWE**	**RWE**	**RWE**	**RWE**	**RWE**	**RWE**
roller table	**RW 111-V**	**RW 111-V (R.B.)**	**RW 111-V (F.B.)**	**RW 111-V (F.B.)**	**RW 222-L**	**Segment holder**
winding head + magazine	**RW 100 + 3,0**	**RW 100-C + 2.0**	**RW 100-C + 2,5**	**RW 100-C + 2,5**	**RW 0 + 10,0**	**RW 0 + 10,0**
Netztrafos **power transformers**						
bare core size mm	175 x 55 x 15,5	120 x 65 x 68	47 x 30 x 50	81 x 44 x 26	84 x 39 x 31	sample of power transformer
turns x Ø wire size mm	primary 3 layers x 0,9	secondary 3 layers x 1,32	primary progressive/ wound x 0,335	primary 1500 x 0,315	secondary 90 x 1,32	View or primary winding
wound coil size mm	180 x 48 x 21	126 x 55 x 74	50 x 24,5 x 55	83 x 40 x 30	87 x 36 x 33	interlayer taping with
machine base	**RWE**	**RWE**	**RWE**	**RWE**	**RWE**	copper foil and secondary winding
roller table	**RW 222-VSO**	**RW 332**	**RW 222-VL**	**RW 222-VL**	**RW 222-VL**	
winding head + magazine	**RW 30 + 30/1 6**	**RW 4 + 4/50**	**RW 25+14**	**RW 25+14**	**RW 300 + 10/K**	

F.L. = Flat belt, R.B. = Round belt, S.S.= Side slider, I.S. = Inside slider

How to find your ideal machine

Step 1

Select the suitable machine line: RUFF offers four different machine lines and each machine line is extremely flexible with it's own head and table changing system. Following graphic enables you to select the suitable machine line for your application. Please check wire range and core OD range.

MINI machine line	**wire Ø 0,05 - 1,0 mm** 10 heads	**core OD 3,0 - 51 mm** 5 tables
BENCH machine line	**wire Ø 0,05 - 2,8 mm** 25 heads	**core OD 5 - 500 mm** 6 tables
FLOOR machine line	**wire Ø 0,4 - 4,5 mm** 12 heads	**core OD 65 - 2800 mm** 9 tables
HEAVY machine line	**wire Ø 0,8 - 6,0 mm** 3 heads	**core OD 100 - 2800 mm** 4 tables

Step 2

Select the suitable machine model: RUFF offers different machine families. Following overview of models enable you to select your machine. Please check the characteristics:

	Basic family	**Global family**	**Evolution family**
MINI machine line 1 model	**MINI-Basic**		
BENCH machine line 3 models	**RWE-Basic**	**RWE-Global**	**RWE-Evolution**
FLOOR machine line 2 models		**RWS-Global** **RWS-Global-Shuttle**	**RWS-Evolution** **RWS-Evo-Shuttle**
HEAVY machine line 1 model			**RW 55-Evolution** **RW 55-Evo-Shuttle**

drives	roller tables with stepper motor winding heads with servo motor	roller tables with servo motor winding heads with motor and inverter	roller tables with servo motor winding heads with servo motor
controller	N.C. SIAX 110L	N.C. SIAX 80 monochrom touch screen	N.C. IPC EL870 touch screen
display	LCD-Display	5.7“ monochrom touch screen	N.C. IPC EL870 touch screen 8” touchpanel with 4 funktion buttons, USB-connention, ethernet interface, PS/2 interface, RJ45, serial interface language, unitext (all characters e.g. Cyrillic etc.)
programming	simple programming, user friendly controller	simple programming, user friendly controller with touch screen monitor	programming for sophisiticated winding applications with industry-PC controller; clear text touch screen with graphical display and automatically winding program calculation
applications	all standard winding jobs	all standard winding jobs	all standard jobs and special resp. hi tech winding applications

Step 3

Select the suitable winding head. Following is an overview of available winding heads. Please compare your winding application with the technical specification of the heads in the RUFF product catalogue:

MINI machine line	**wire 0,05 - 1,0 mm** 10 heads, 5 tables						
direct, multisystem and miniature winding heads	**RW 35-D** direct winding head	**RW 35-MINI** miniature winding head	**RW 45-MINI** miniature winding head	**RW 60-MINI** miniature winding head	**RW 75-MINI** multisystem winding head	**RW 100-MINI** multisystem winding head	**RW 200-MINI** multisystem winding head

BENCH machine line	**wire 0,05 - 2,8 mm** 25 heads, 6 tables						
gear rack heads	**RW 0**	**RW 1**	**RW 2**	**RW 3**	**RW 4**	**RW 4-V**	
slider heads	**RW 10**	**RW 20**	**RW 25**	**RW 30**	**RW 40**	**RW 40-V**	
belt heads	**RW 60-C**	**RW 100-C**	**RW 100**	**RW 200**	**RW 200-V**	**RW 300**	
taping heads	**RW 0/B**	**RW 1/B**	**RW 2/B**	**RW 3/B**	**RW 4/B**	**RW 200/B**	**RW 300/B**

FLOOR machine line	**wire 0,4 - 4,5 mm** 12 heads, 9 tables						
gear rack heads	**RW 33**	**RW 44-1**	**RW 44-1V**	**RW 45**	**RW 45-V**	**RW 45-380**	**RW 45-EH**
taping heads	**RW 33/B**	**RW 44/1B**	**RW 45/B**	**RW 45-380/BU**			

HEAVY machine line	**wire 0,8 - 6,0 mm** 3 heads, 4 tables						
gear and taping rack heads	**RW 55**	**RW 55/B**	**RW 55/BU**				